

| | |
|---|---|
| Sound | 20 dB(A) |
| Replaces open tube | 12 mm |
| Air-/ cost savings | 146 Nm³/h |

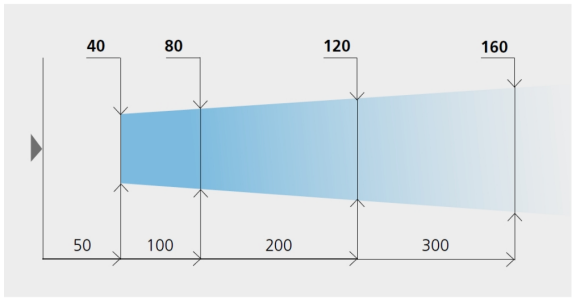


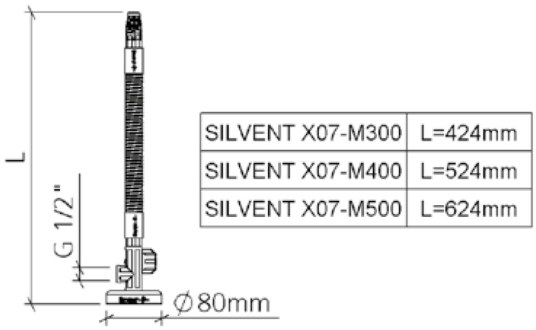


| | |
|---|---|
| SILVENT X07-M300 | L=424mm |
| SILVENT X07-M400 | L=524mm |
| SILVENT X07-M500 | L=624mm |

# Silvent X07-M300

VA magnet holder with Multi-Laval nozzle X07 with VA Flexblow | 22,5N - L=300mm - IG 1/2

Silvent X07-M300: Magnetic holder with flow control, FlexBlow hose and nozzle for quick installation and easy adjustment to the correct blowing angle. The FlexBlow hose maintains the desired position even at high pressure. Available in 3 standard lengths. Otherwise the same performance as X07.

## Technical data

| | |
|---|---|
| Item number | 763070 |
| Weight | 1050 g |
| Air consumption | 120 Nm³/h |
| Sound | 96 dB(A) |
| Blowing Power | 22,5 N |
| Max. Operating pressure | 1,0 MPa |
| Max temperature | 70 °C |
| Material | 1.4404 Stainless Steel |
| Air pattern | Multi Laval |
| Connection | 1/2 BSP |