

Replaces open tube	6 mm
Noise reduction	24 dB(A)
Air-/ cost savings	39 Nm³/h

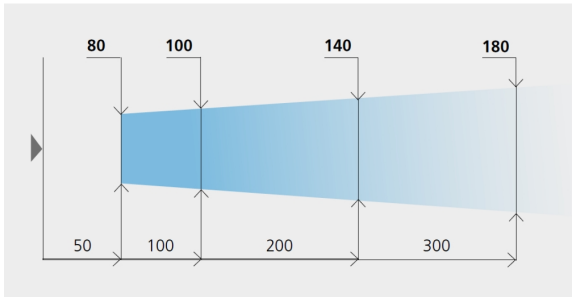

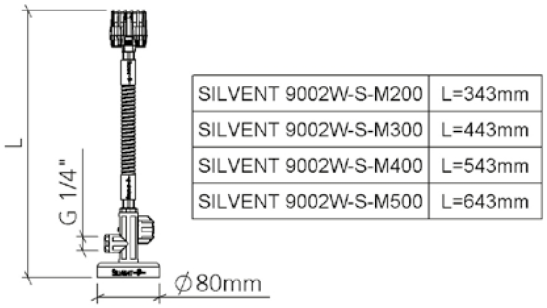

SILVENT 9002W-S-M200	L=343mm
SILVENT 9002W-S-M300	L=443mm
SILVENT 9002W-S-M400	L=543mm
SILVENT 9002W-S-M500	L=643mm

Silvent 9002W-S-M200

VA magnet holder with flat nozzle SV 9002W-S with VA Flexblow | 5,5N - L=200mm - IG 1/4

Silvent 9002W-S-M200: Magnetic holder with flow control, FlexBlow hose and nozzle for quick installation and easy adjustment to the correct blowing angle. The FlexBlow hose maintains the desired position even at high pressure. Available in 4 standard lengths. Otherwise the same performance as 9002W-S.

Technical data

Item number	763040
Weight	916 g
Air consumption	28 Nm³/h
Sound	78 dB(A)
Blowing Power	5,5 N
Max. Operating pressure	1,0 MPa
Max temperature	70 °C
Material	1.4404 Stainless Steel
Air pattern	Flat
Connection	1/4 BSP