

Replaces open tube	12 mm
Noise reduction	20 dB(A)
Air-/ cost savings	146 Nm³/h

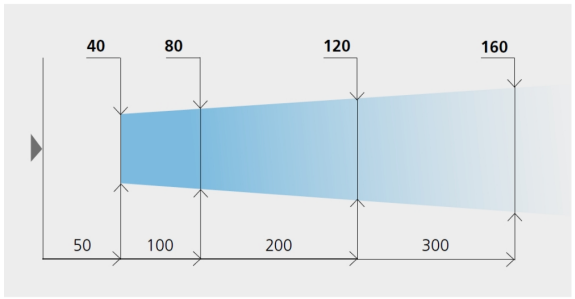

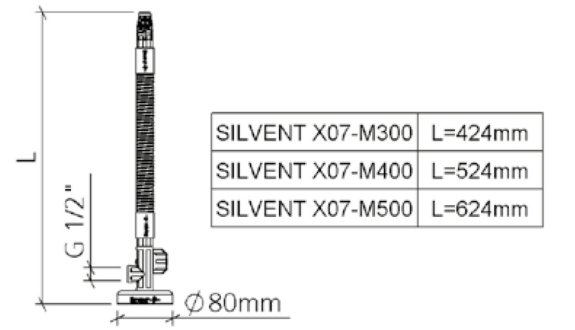

SILVENT X07-M300	L=424mm
SILVENT X07-M400	L=524mm
SILVENT X07-M500	L=624mm

Silvent X07-M500

VA magnet holder with Multi-Laval nozzle X07 with VA Flexblow | 22,5N - L=500mm - IG 1/2

Silvent X07-M500: Magnetic holder with flow control, FlexBlow hose and nozzle for quick installation and easy adjustment to the correct blowing angle. The FlexBlow hose maintains the desired position even at high pressure. Available in 3 standard lengths. Otherwise the same performance as X07.

Technical data

Item number	753058
Weight	1220 g
Air consumption	120 Nm³/h
Sound	96 dB(A)
Blowing Power	22,5 N
Max. Operating pressure	1,0 MPa
Max temperature	70 °C
Material	1.4404 Stainless Steel
Air pattern	Multi Laval
Connection	1/2 BSP