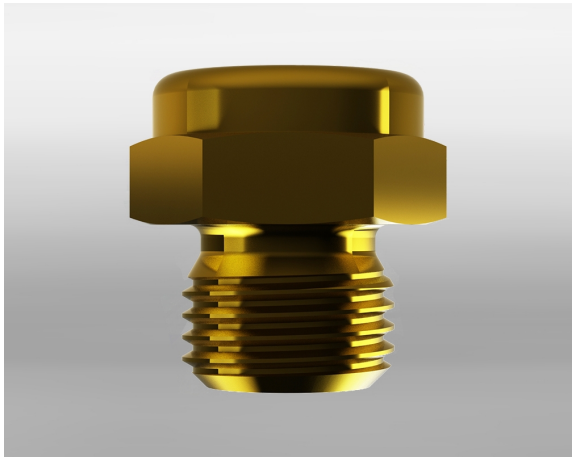

Hole (opt.)	1 - 4 mm
Angle (opt.)	50 - 85°

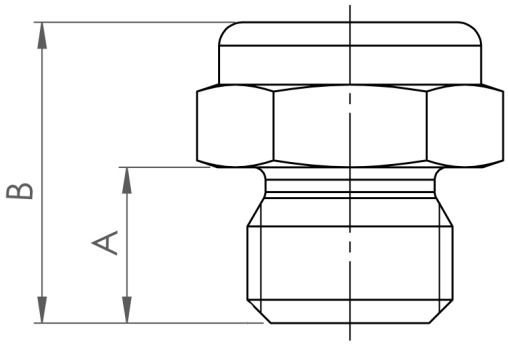

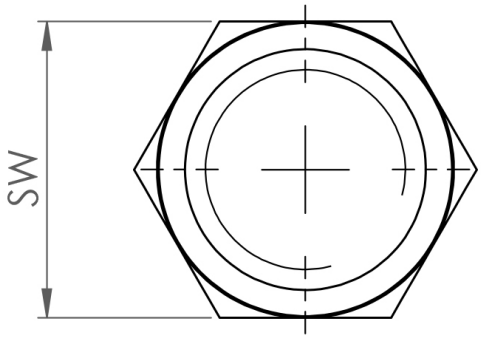

B-B-HCN-1/4-B-50-1

Hollow cone nozzle / 1/4/ Brass / 50°

swepro B-B-HCN-1/4-B-50-1 – The swepro hollow cone nozzle, made from brass, is suitable for continuous use in all industry sectors. Applications for the hollow cone nozzle are cleaning, cooling, coating and wetting processes. One advantage of the hollow cone nozzle is its compact installation size. Installation is even possible in areas of application where space is confined. The spray pattern is a hollow cone that allows uniform distribution of the fluid. The hollow cone nozzle is available in many other variations.

Technical data

Item number	248096
Weight	17,5 g
Spraying angle	50°
Dimension A:	10 mm
Dimension B:	19,3 mm
Hole	1 mm
Wrench size (SW)	17 mm
Material	Brass
Spraying pattern	hollow cone
Connection	1/4" BSPP