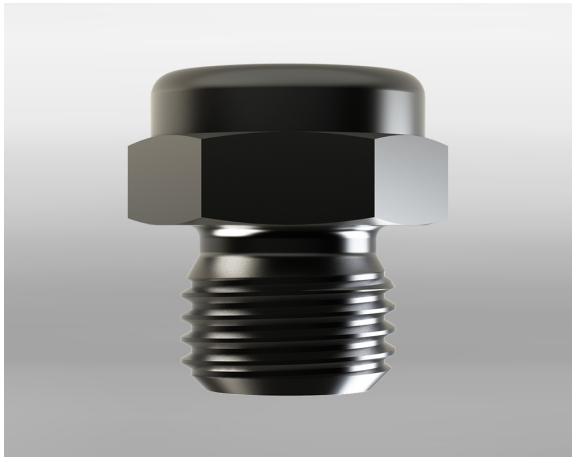

Hole (opt.)	1 - 4 mm
Angle (opt.)	50 - 85°

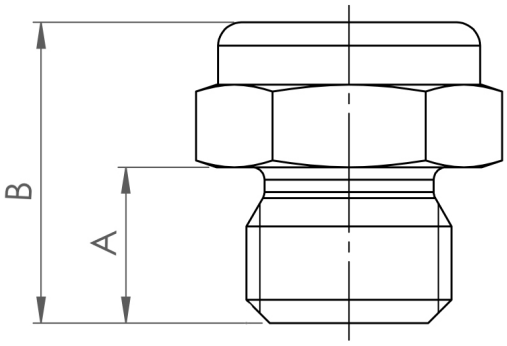

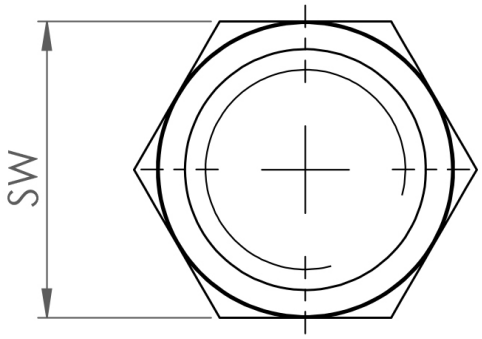

B-B-HCN-1/4-303-50-1

Hollow cone nozzle / 1/4/ 1.4305 / 50°

swepro B-B-HCN-1/4-303-50-1 – The swepro hollow cone nozzle, made from 1.4305 stainless steel, is suitable for continuous use in all industry sectors. Applications for the hollow cone nozzle are cleaning, cooling, coating and wetting processes. One advantage of the hollow cone nozzle is its compact installation size. Installation is even possible in areas of application where space is confined. The spray pattern is a hollow cone that allows uniform distribution of the fluid. The hollow cone nozzle is available in many other variations.

Technical data

Item number	247848
Weight	17,5 g
Spraying angle	50°
Dimension A:	10 mm
Dimension B:	19,3 mm
Hole	1 mm
Wrench size (SW)	17 mm
Material	1.4305 Stainless Steel
Spraying pattern	hollow cone
Connection	1/4" BSPP