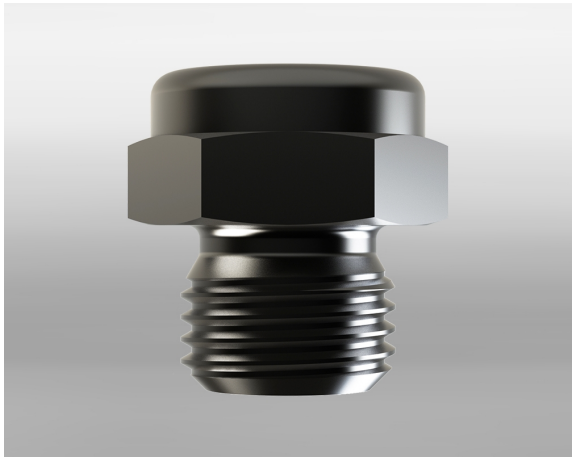

Hole (opt.)	1 - 4 mm
Angle (opt.)	30 - 120°

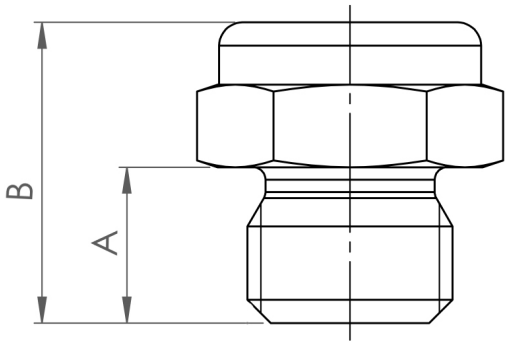

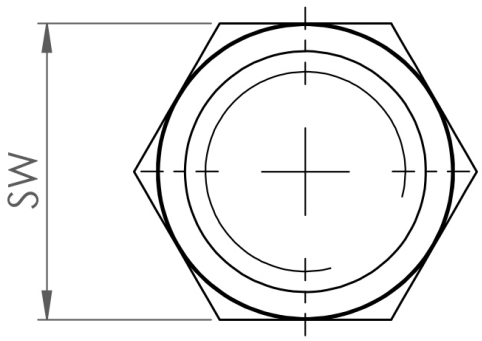

B-B-FCN-1/4-303-30-1

Full cone nozzle/ 1/4 / 1.4305 / 30°

swepro B-B-FCN-1/4-303-30-1 – The swepro full cone nozzle, made from 1.4305 stainless steel, is suitable for continuous use in all industry sectors. Applications for the full cone nozzle are cleaning, cooling, coating and wetting processes. One advantage of the full cone nozzle is its compact installation size. Installation is even possible in areas of application where space is confined. The spray pattern is a consistent full cone that allows uniform distribution of the fluid. The full cone nozzle is available in many other variations.

Technical data

Item number	238924
Weight	17,5 g
Spraying angle	30°
Dimension A:	10 mm
Dimension B:	19,3 mm
Hole	1 mm
Wrench size (SW)	17 mm
Material	1.4305 Stainless Steel
Spraying pattern	full cone
Connection	1/4" BSPP