Product test possible!	
Replaces open tube	**12 mm**
Noise reduction	**88 %**
Air-/ cost savings	**55 %**

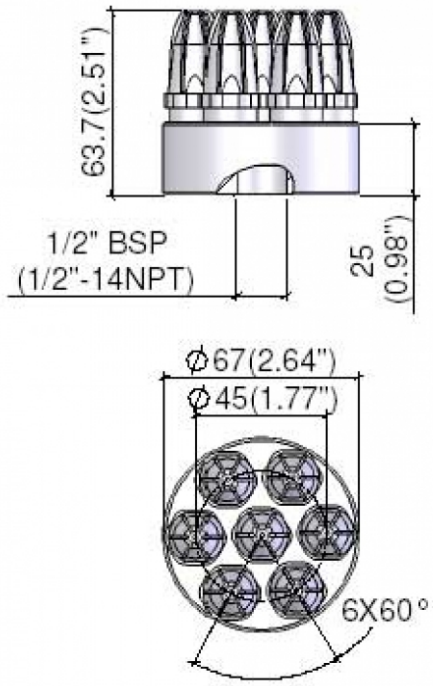

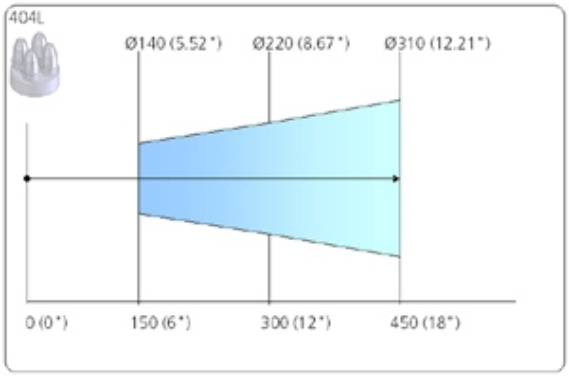

Silvent 407L

Multiple nozzle head

SILVENT 407 L: for operations that require high blowing force and longer blowing range. Typical areas of application include use in steel mills, paper mills and foundries for cleaning, cooling, drying etc. Fully complies with the noise limitations of the EU Machine Directive and OSHA safety standards. Patented

Technical data

Item number	714179
Air consumption	119 Nm³/h
Air connection	1/2 "
Sound	86 dB(A)
Blowing Power	23.8 N
Dimensions LxWxH	67 x 63.7 mm
Material	Zinc
Air pattern	Wide