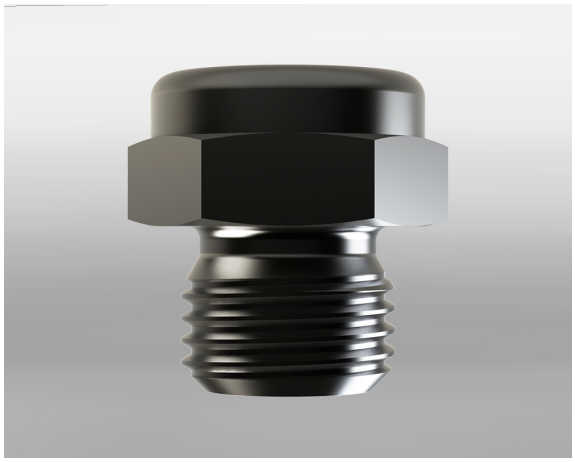

Hole (opt.)	1 - 5 mm

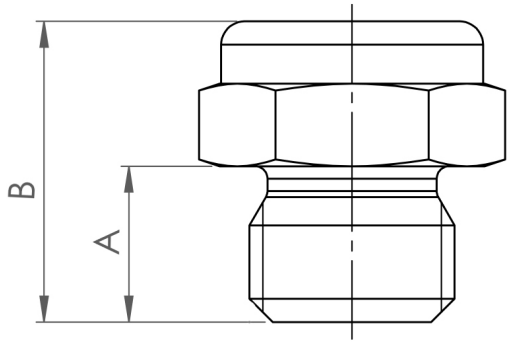

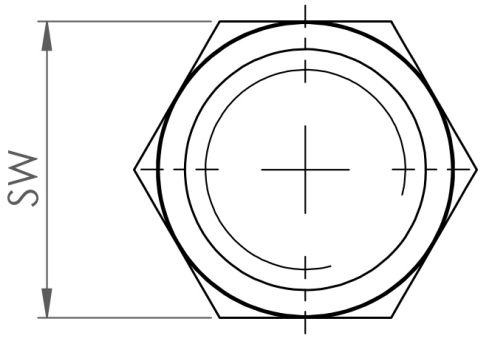

B-B-SSN-1/4-303-0-1

Solid stream nozzle / 1/4 / 1.4305 / 1 mm

swepro B-B-SSN-1/4-303-0-1 – The swepro solid stream nozzle, made from 1.4305 stainless steel, is suitable for continuous use in a wide range of industry sectors. Applications for the solid stream nozzle are cleaning, cooling, coating and wetting processes. One advantage of the solid stream nozzle is its compact installation size. Installation is even possible in areas of application where space is confined. The spray pattern is a concentrated, smooth and turbulence-free jet. An optimised spray result is achieved at a little as 1 bar pressure. The solid stream nozzle is available in many other variations.

Technical data

Item number	233381
Weight	17,5 g
Flow (3 bar)	0,5 l/min
Dimension A:	10 mm
Dimension B:	19,3 mm
Hole	1 mm
Wrench size (SW)	17 mm
Material	1.4305 Stainless Steel
Spraying pattern	Solid stream
Connection	1/4" BSPP