

Hole (opt.)	1 - 6 mm
Angle (opt.)	30 - 120°

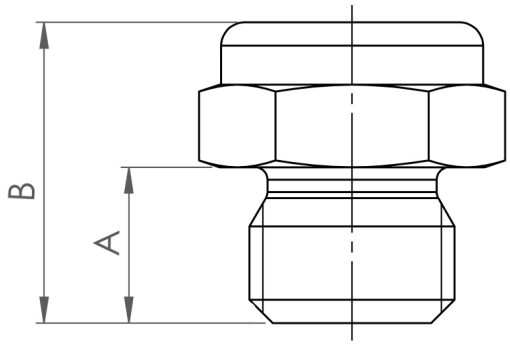

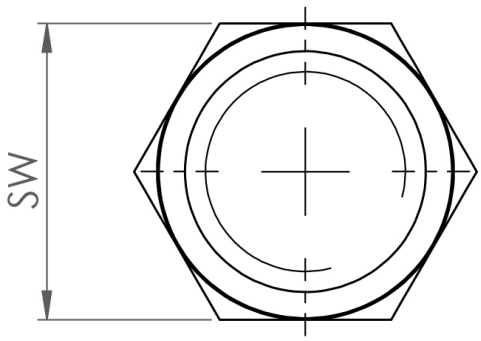

B-B-FFN-1/4-B-30-1

Flat fan nozzle / 1/4 / Brass / 30°

swepro B-B-FFN-1/4-B-30-1 - The swepro flat fan nozzle, made from brass, is suitable for continuous use in all industry sectors. Applications for the flat fan nozzle are cleaning, cooling, coating and wetting processes. One advantage of the flat fan nozzle is its compact installation size. Installation is even possible in areas of application where space is confined. The spray pattern is a consistent flat jet that allows uniform distribution of the fluid. The flat fan nozzle is available in many other variations.

Technical data

Item number	210705
Weight	17,5 g
Spraying angle	30°
Flow (3 bar)	1,3 l/min
Dimension A:	10 mm
Dimension B:	19,3 mm
Wrench size (SW)	17 mm
Material	Brass
Connection	1/4" BSPP