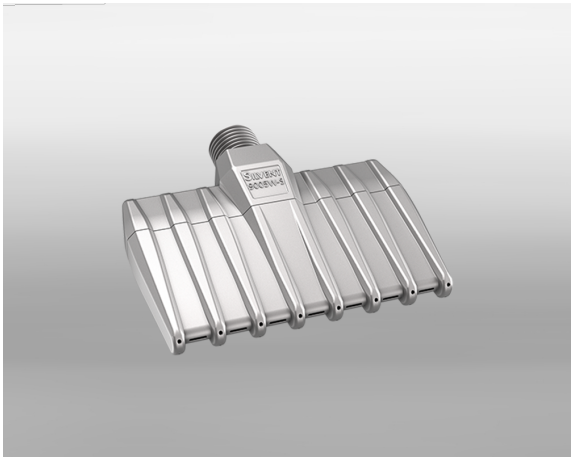

Replaces open tube	10 mm
Noise reduction	25 dB(A)
Air-/ cost savings	109 Nm³/h

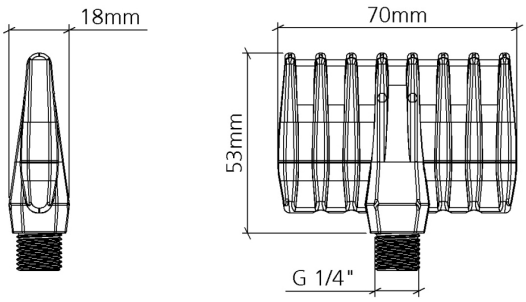

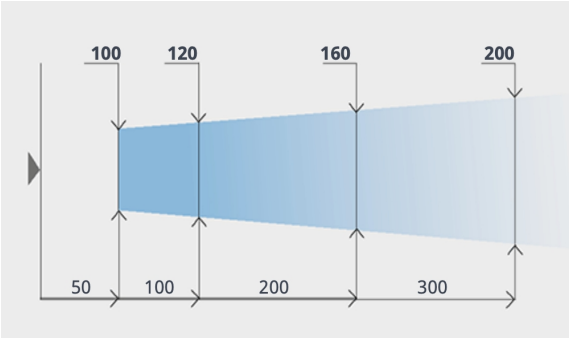

Flat spray nozzle SV 9005W-S

Stainless steel / 15.0 N / B = 70 mm / AG 1/4

SV 9005W-S: an energy-efficient flat stainless steel nozzle that generates a strong, efficient blowing force at an exceptionally low noise level. Compressed air is optimally used in this flat nozzle, which through its unique design introduces a completely new blowing technology feature. The aerodynamic nozzle design achieves the effect by maximizing entrainment of air. Each orifice is also uniquely designed to optimize the entrainment area. These small orifices combined with the aerodynamic slots of the nozzle provide high efficiency.

Technical data

Item number	719716
Weight	105 g
Air consumption	76 Nm³/h
Sound	87 dB(A)
Blowing Power	15,0 N
Max. Operating pressure	1,0 MPa
Max temperature	400 °C
Material	1.4404 Stainless Steel
Air pattern	Flat
Connection	1/4 BSP